MXYx 2 axes / IO

Gantry type | Cable carrier

Ordering method

MXYx - C - [ ] - [ ] - [ ] - IO - [ ] - RCX222 - [ ] - R - [ ] - [ ]

Model	Cable	Combination	X-axis stroke	Y-axis stroke	ZR-axis	Cable length	Controller	Usable for CE	Regeneratine unit	Input/Output selection 1	Input/Output selection 2
MXYx	C	G1 G2 G3 G4	25 to 125cm	15 to 85cm	IO	3L: 3.5m (Standard) 5L: 5m 10L: 10m	RCX222 DRCX2010	No entry: Standard E: CE marking	R: RG2 (RCX222) R: RGU-2 (DRCX)	N: NPN Note 1 P: PNP CC: CC-Link DN: DeviceNet PB: Profibus EN: Ethernet Note 1 YC: YC-Link Note 2	No entry: None N1: OP.DIO24/16 (NPN) Note 1 P1: OP.DIO24/17 (PNP) EN: Ethernet Note 1 Note 3

Note 1. NPN and Ethernet cannot be selected if using CE marking.
Note 2. Available only for the master.
Note 3. Only when CC or DN or PB was selected for I/O select 1 above. EN can be selected in I/O select 2.

Specification

	X-axis	Y-axis
Axis construction Note 1	F17	F14H
AC servo motor output (W)	400	200
Repeatability Note 2 (mm)	+/-0.01	+/-0.01
Drive system	Ball screw (Class C7)	Ball screw (Class C7)
Ball screw lead (Deceleration ratio) (mm)	20	20
Maximum speed Note 3 (mm/sec)	1200	1200
Moving range (mm)	250 to 1250	150 to 850
Robot cable length (m)	Standard: 3.5 Option: 5,10	

Note 1. Use caution that the flame machining (installation holes, tap holes) differs from single-axis robots'.
Note 2. Positioning repeatability in one direction.
Note 3. When the X-axis stroke is longer than 850mm (750mm for Y-axis), resonance of the ball screw may occur depending on the operation conditions (critical speed). In this case, reduce the speed setting on the program by referring to the maximum speeds shown in the table below.

Maximum payload (kg)

Y stroke (mm)	XY 2 axes
150	29
250	29
350	29
450	29
550	29
650	29
750	24
850	19

Controller

Controller	Operation method
RCX222-R	Programming / /O point trace / Remote command / Operation using RS-232C communication
DRCX2010-R	

MXYx 2 axes / IO G1

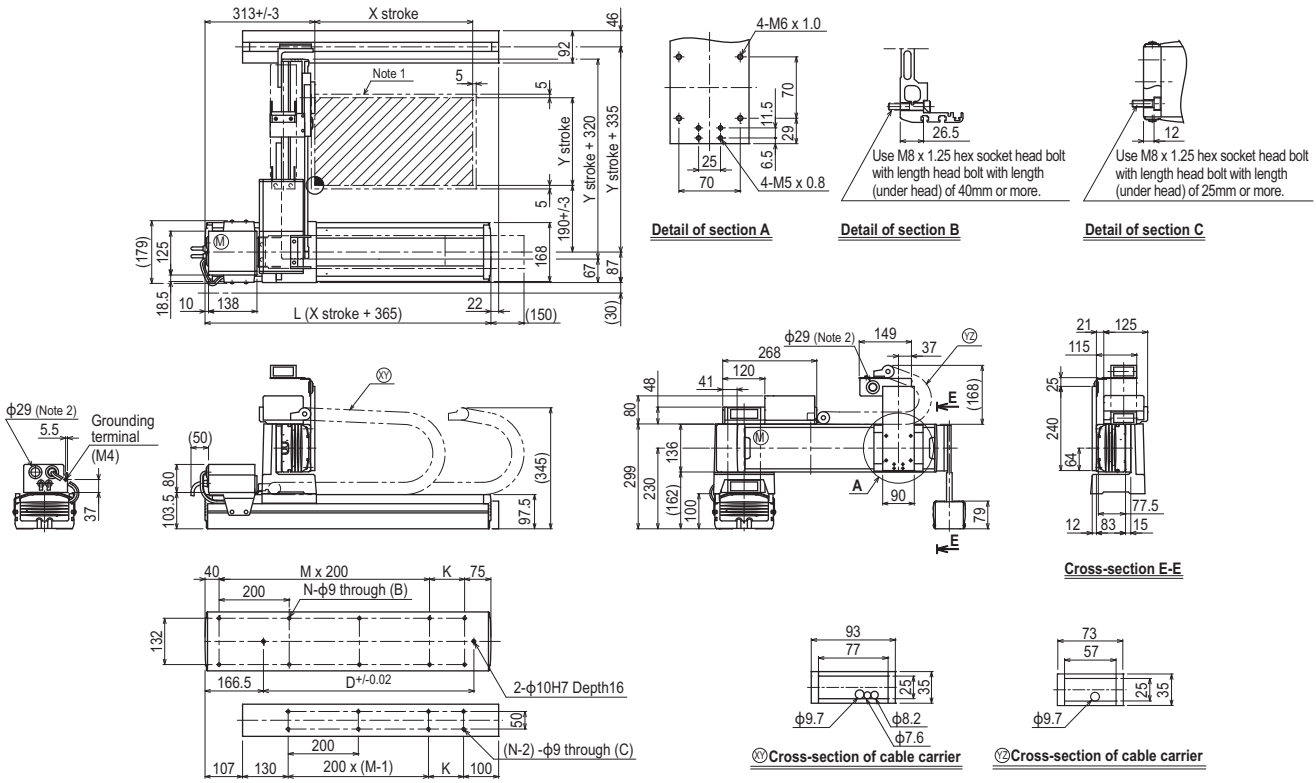

X stroke	250	350	450	550	650	750	850	950	1050	1150	1250
L	615	715	815	915	1015	1115	1215	1315	1415	1515	1615
K	100	200	100	200	100	200	100	200	100	200	100
D	240	420	600	600	780	780	960	960	1140	1140	1320
M	2	2	3	3	4	4	5	5	6	6	7
N	8	8	10	10	12	12	14	14	16	16	18

Y stroke		150	250	350	450	550	650	750	850
Maximum speed for each stroke (mm/sec) Note 3	X-axis	1200						960	840	720	600	480
	Speed setting	–						80%	70%	60%	50%	40%
	Y-axis	1200						960	780			
	Speed setting	–						80%	65%			

Note 1. The moving range when returning to origin and the stop position when stopping by the mechanical stopper.
Note 2. User cable extraction port.
Note 3. When the X-axis stroke is longer than 850mm (750mm for Y-axis), resonance of the ball screw may occur depending on the operation conditions (critical speed). In this case, reduce the speed setting on the program by referring to the maximum speeds shown in the table at the left.