HXYx 4 axes / ZRL

Gantry type | Cable carrier | Z-axis: clamped base / moving table type (200W)+R-axis

Ordering method

HXYx-	C	-		-		-	ZRL	-		-		-	RCX240	-		-	R	-		-		-	BB
Model	Cable	Combination	X-axis stroke	Y-axis stroke	ZR-axis	Z-axis stroke	Cable length	Controller	Usable for CE	Regeneratine unit	Option I/O Note 1	Network option	Battery
		G1 G2 G3 G4	25 to 125cm	25 to 105cm		25 to 55cm	3L: 3.5m (Standard) 5L: 5m 10L: 10m		No entry: Standard E: CE marking	R: RGU-2	N, P: Standard I/O 16/8 N1, P1: 40/24 N2, P2: 64/40 N3, P3: 88/56 N4, P4: 112/72	No entry: None CC: CC-Link DN: DeviceNet PB: Profibus EN: Ethernet YC: YC-Link No e 2	BB: 4 pcs

Note 1. N to N4 if NPN was selected, or P to P4 if PNP was selected for the I/O board.
Note 2. Available only for the master.

Specification

	X-axis	Y-axis	Z-axis	R-axis
Axis construction Note 1	F20	F17	F14H-BK	R20
AC servo motor output (W)	600	400	200	200
Repeatability Note 2 (XYZ mm) (R °)	+/-0 01	+/-0.01	+/-0.01	+/-0.0083
Drive system	Ball screw (Class C7)	Ball screw (Class C7)	Ball screw (Class C7)	Harmonic gear
Ball screw lead (Deceleration ratio) (mm)	20	20	10	(1/50)
Maximum speed Note 3 (XYZ mm/sec) (R °/sec)	1200	1200	600	360
Moving range (XYZ mm) (R °)	250 to 1250	250 to 1050	250 to 550	360
Robot cable length (m)	Standard: 3.5 Option: 5,10			

Note 1. Use caution that the flame machining (installation holes, tap holes) differs from single-axis robots'.
Note 2. Positioning repeatability in one direction.
Note 3. When the X-axis/Y-axis stroke is longer than 850mm, resonance of the ball screw may occur depending on the operation conditions (critical speed). In this case, reduce the speed setting on the program by referring to the maximum speeds shown in the table below.

Maximum payload (kg)

	Z stroke (mm)
Y stroke (mm)	250 to 550
250 to 1050	12

Controller

Controller	Operation method
RCX240-R	Programming / /O point trace / Remote command / Operation using RS-232C communication

HXYx 4 axes / ZRL G1

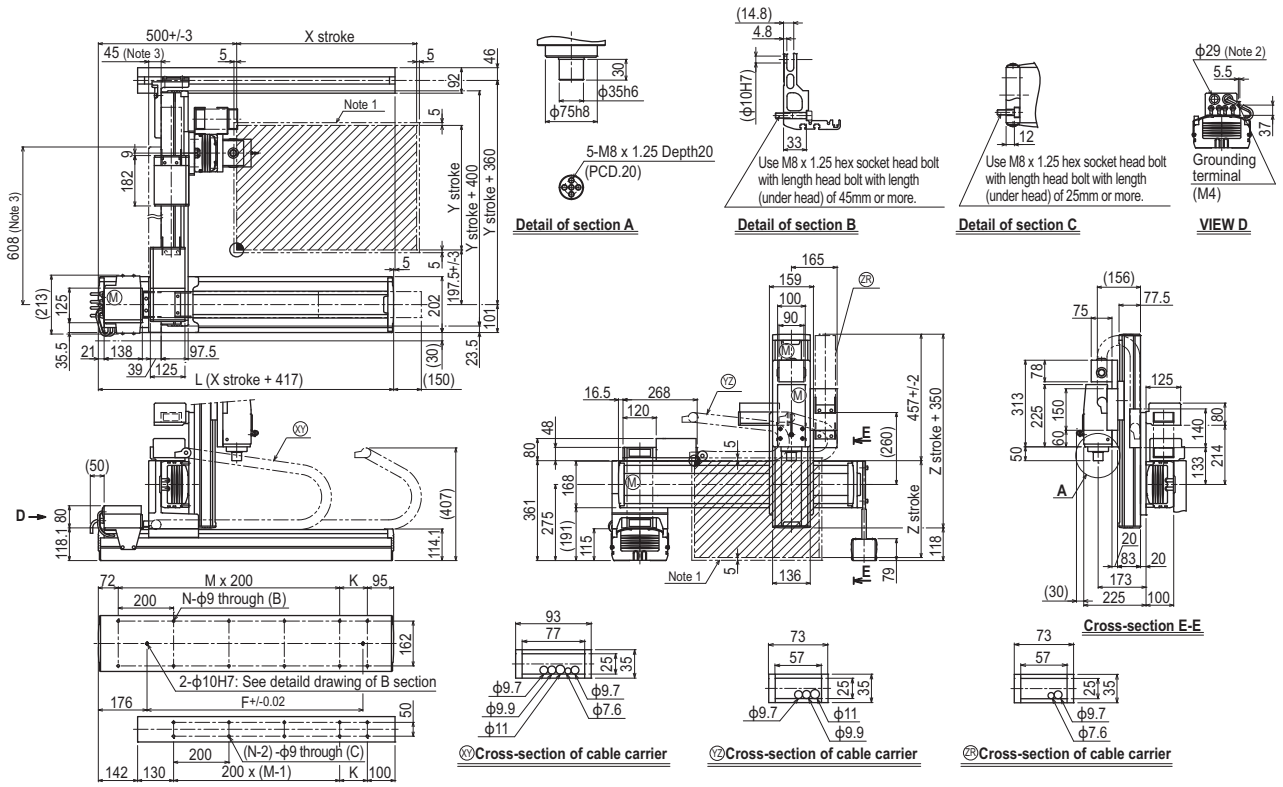

X stroke	250	350	450	550	650	750	850	950	1050	1150	1250
L	667	767	867	967	1067	1167	1267	1367	1467	1567	1667
K	100	200	100	200	100	200	100	200	100	200	100
F	420	420	600	600	780	780	960	960	1140	1320	1320
M	2	2	3	3	4	4	5	5	6	6	7
N	8	8	10	10	12	12	14	14	16	16	18

Y stroke	250	350	450	550	650	750	850	950	1050
Z stroke	250	350	450	550					

Maximum speed for each stroke (mm/sec) Note 4								
	X-axis	1200	960	840	720	600	480
	Y-axis	1200	960	840	720		
	Speed setting	–	80%	70%	60%	50%	40%

Note 1. The moving range when returning to origin and the stop position when stopping by the mechanical stopper.
Note 2. User cable extraction port.
Note 3. Dimension of reinforced bracket (To be installed when the Y stroke is 750mm or longer)

Note 4. When the X-axis/Y-axis stroke is longer than 850mm, resonance of the ball screw may occur depending on the operation conditions (critical speed). In this case, reduce the speed setting on the program by referring to the maximum speeds shown in the table at the left.